SAMSUNG CONFIDENTIAL
THIS DOCUMENT CONTAINS CONFIDENTIAL
PROPRIETARY INFORMATION THAT IS
SAMSUNG ELECTRONICS CO'S PROPERTY.
DO NOT DISCLOSE TO OR DUPLICATE FOR OTHERS
EXCEPT AS AUTHORIZED BY SAMSUNG.

SM-A526U

Sheet01 : GSM / WCDMA / LTE / NR(N41) RF
Sheet02 : TRANSCEIVER, SUB ANT
Sheet03 : CONNECTIVITY(BT/WIFI/FM), NFC
Sheet04 : AP(SM6350-INTERFACE,GPIO)
Sheet05 : AP(POWER), MEM(uMCP)
Sheet06 : PMIC(PM6350,PM6150A), IF PMIC
Sheet07 : AUDIO Codec, SENSOR, SIM, SD
Sheet08 : CAMERA
Sheet09 : DISPLAY PMIC, C2C

SAMSUNG CONFIDENTIAL
THIS DOCUMENT CONTAINS CONFIDENTIAL
AND PROPRIETARY INFORMATION OF
SAMSUNG ELECTRONICS CO. LTD. PROPERTY.
DO NOT DISCLOSE TO OR DUPLICATE FOR OTHERS
EXCEPT AS AUTHORIZED BY SAMSUNG.

RF PART 1

MAIN ANT1

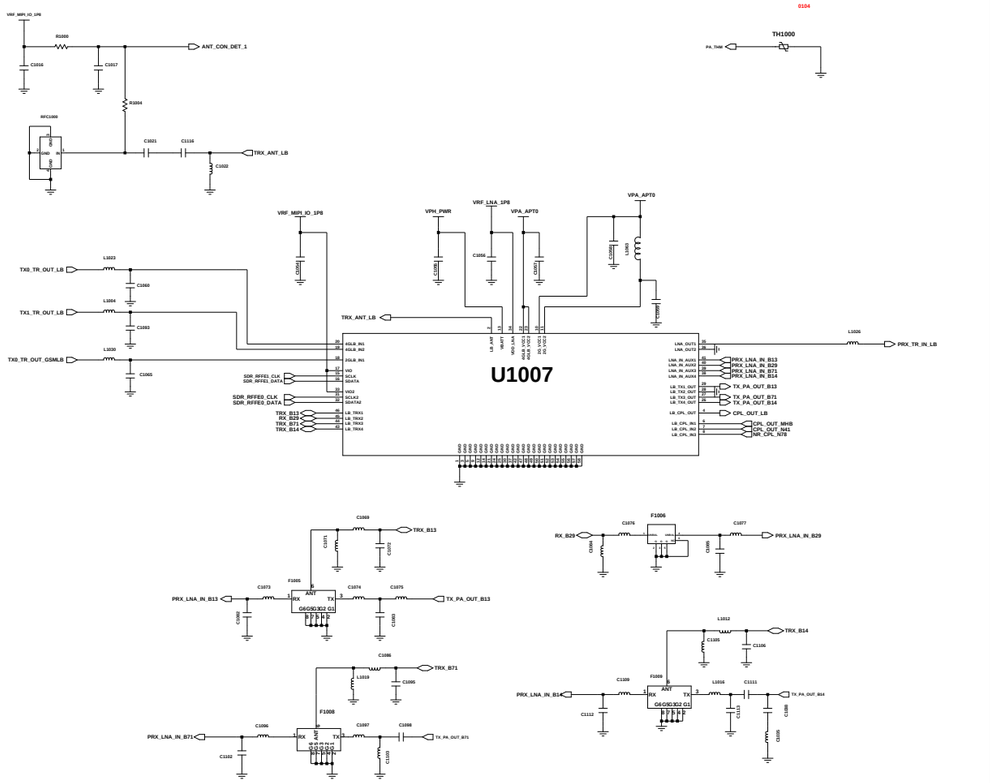

MAIN ANT2

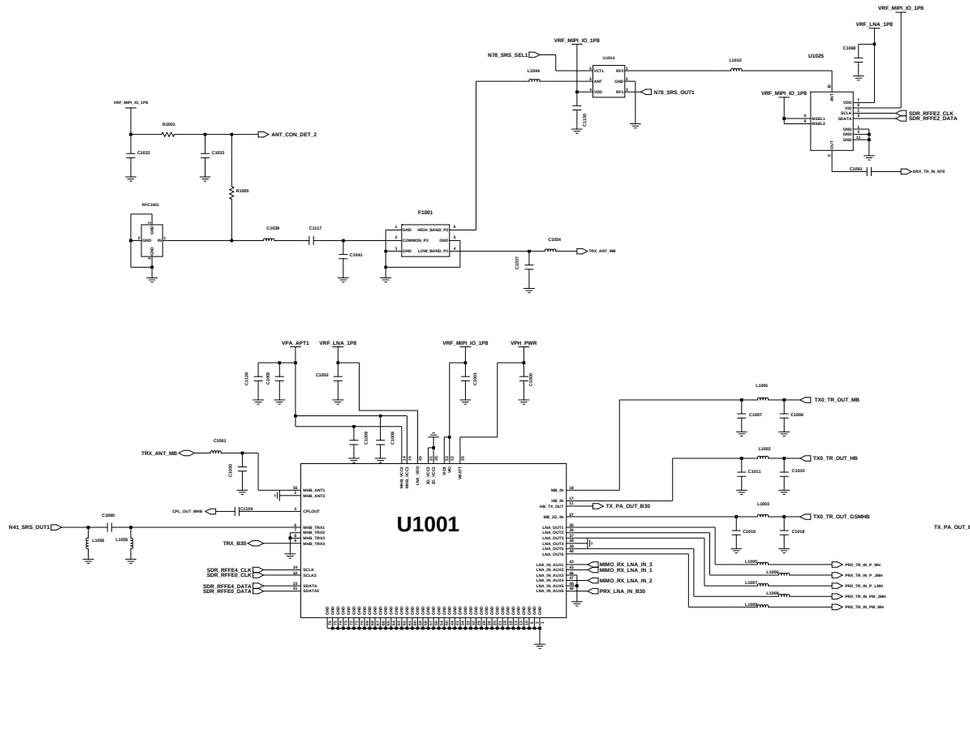

SUB ANT2

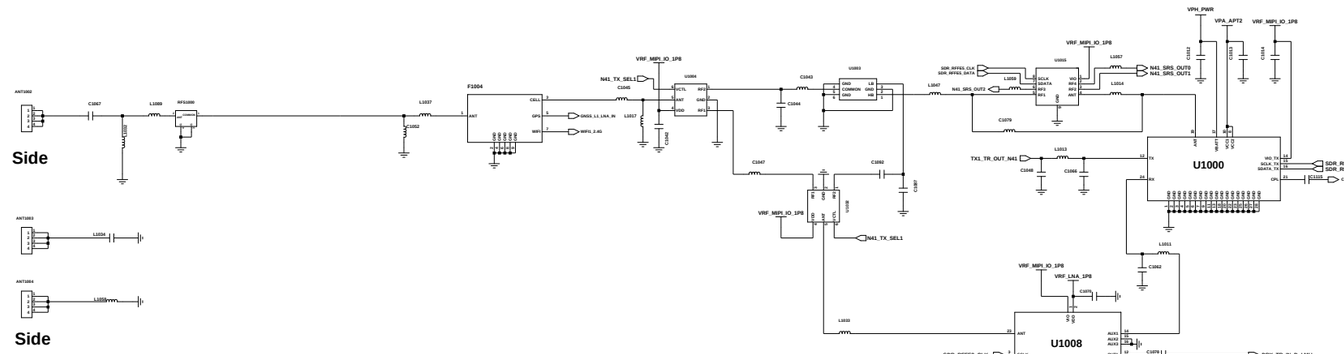

SUB ANT3

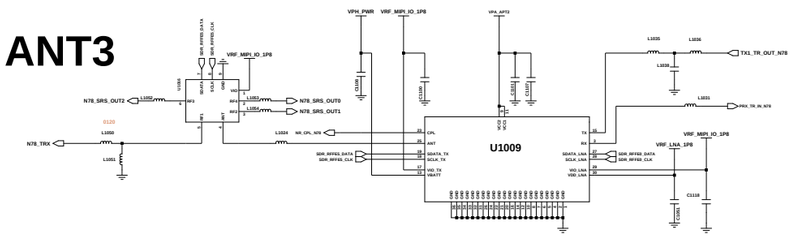

SUB ANT1

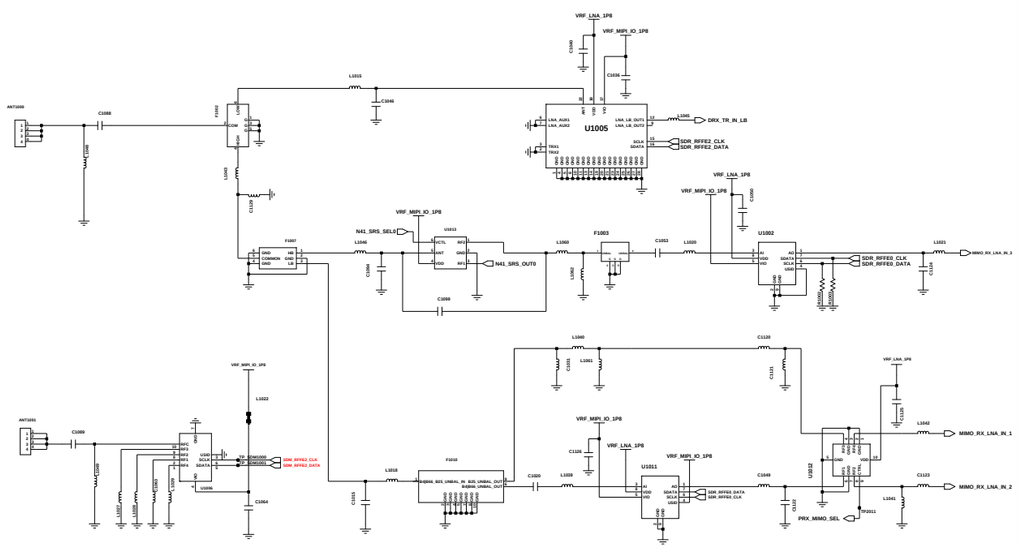

Engineer:	A52 5G
Drawn by:	
R&D CHK:	TITLE: RF PAM/FEM
DOC CTRL CHK:	
MFG DOCUMENT CHK:	

Changed by:	Date Changed:	Time Changed:	QA CHK:	REV:	Drawing Number:

SAMSUNG CONFIDENTIAL
THIS DOCUMENT CONTAINS CONFIDENTIAL
AND PROPRIETARY INFORMATION OF
SAMSUNG ELECTRONICS. THIS PROPERTY
DO NOT DISCLOSE TO OR DUPLICATE FOR OTHERS
EXCEPT AS AUTHORIZED BY SAMSUNG.

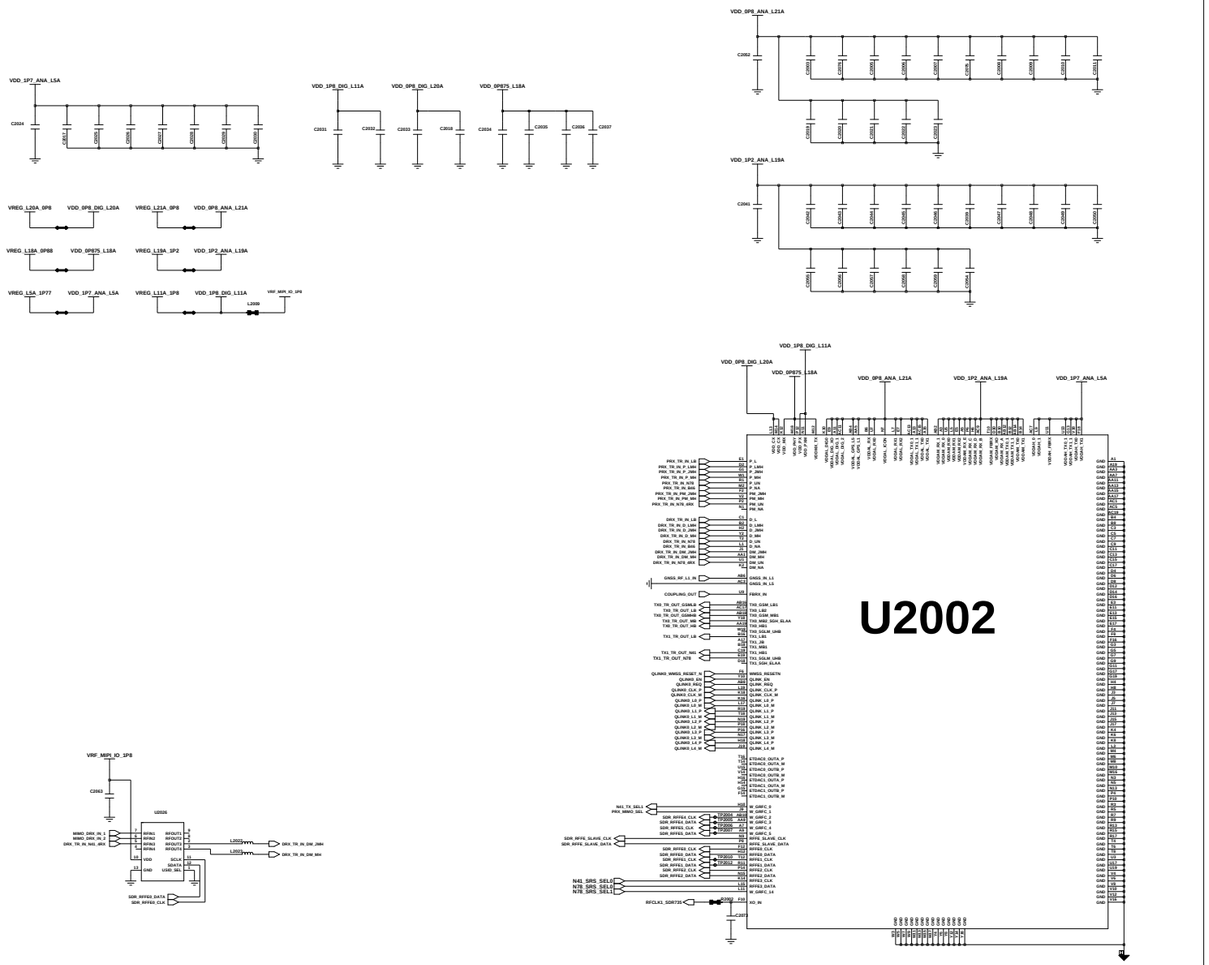

SUB ANT4

SUB ANT5

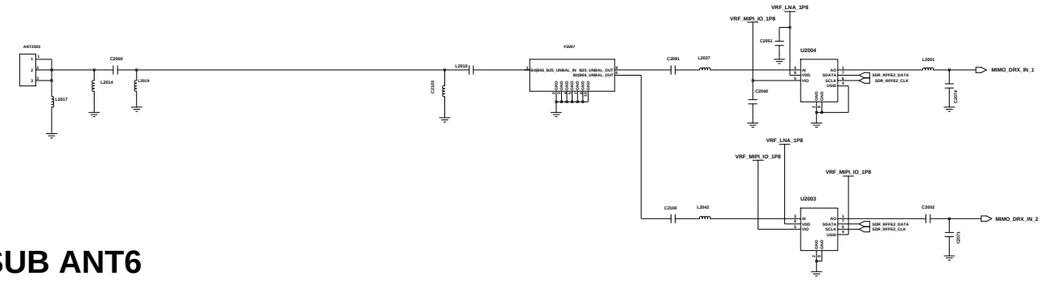

SUB ANT6

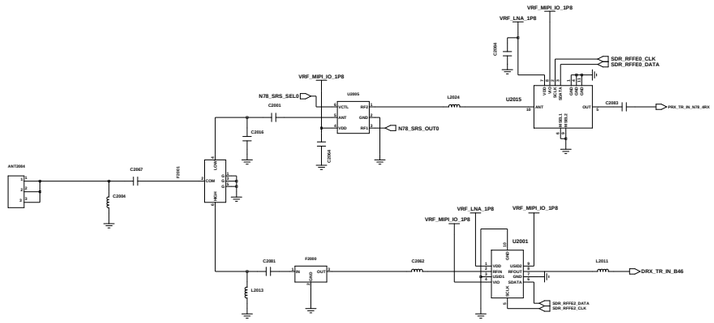

SUB ANT7

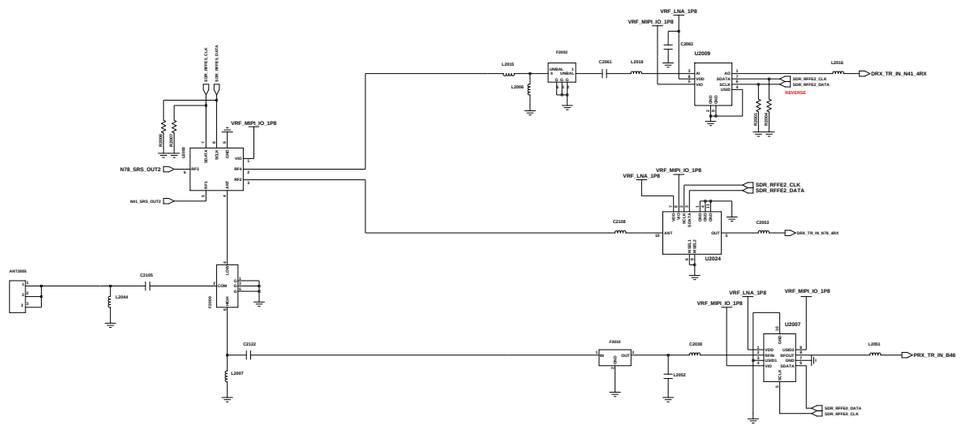

APT0

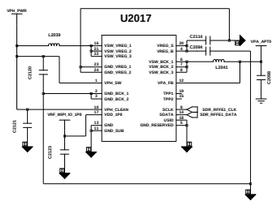

APT2

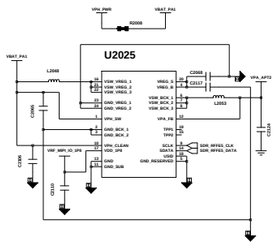

APT1

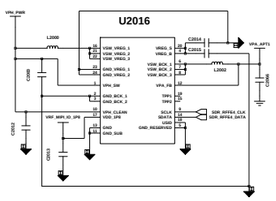

Coupling SW

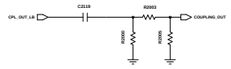

Engineer:		A52 5G	
Design by:			
PCB Code:		TITLE: RF TRCV/PAM/APT	SIZE
DDC & FML Code:			
MFG Vendor Code:			
QA Code:		Drawing Number:	REV
Changed by:	Date Changed:	Time Changed:	

SAMSUNG CONFIDENTIAL
THIS DOCUMENT CONTAINS CONFIDENTIAL
PROPRIETARY INFORMATION THAT IS
SAMSUNG ELECTRONICS CO'S PROPERTY.
DO NOT DISCLOSE TO OR DUPLICATE FOR OTHERS
EXCEPT AS AUTHORIZED BY SAMSUNG.

WIFI/BT/FM

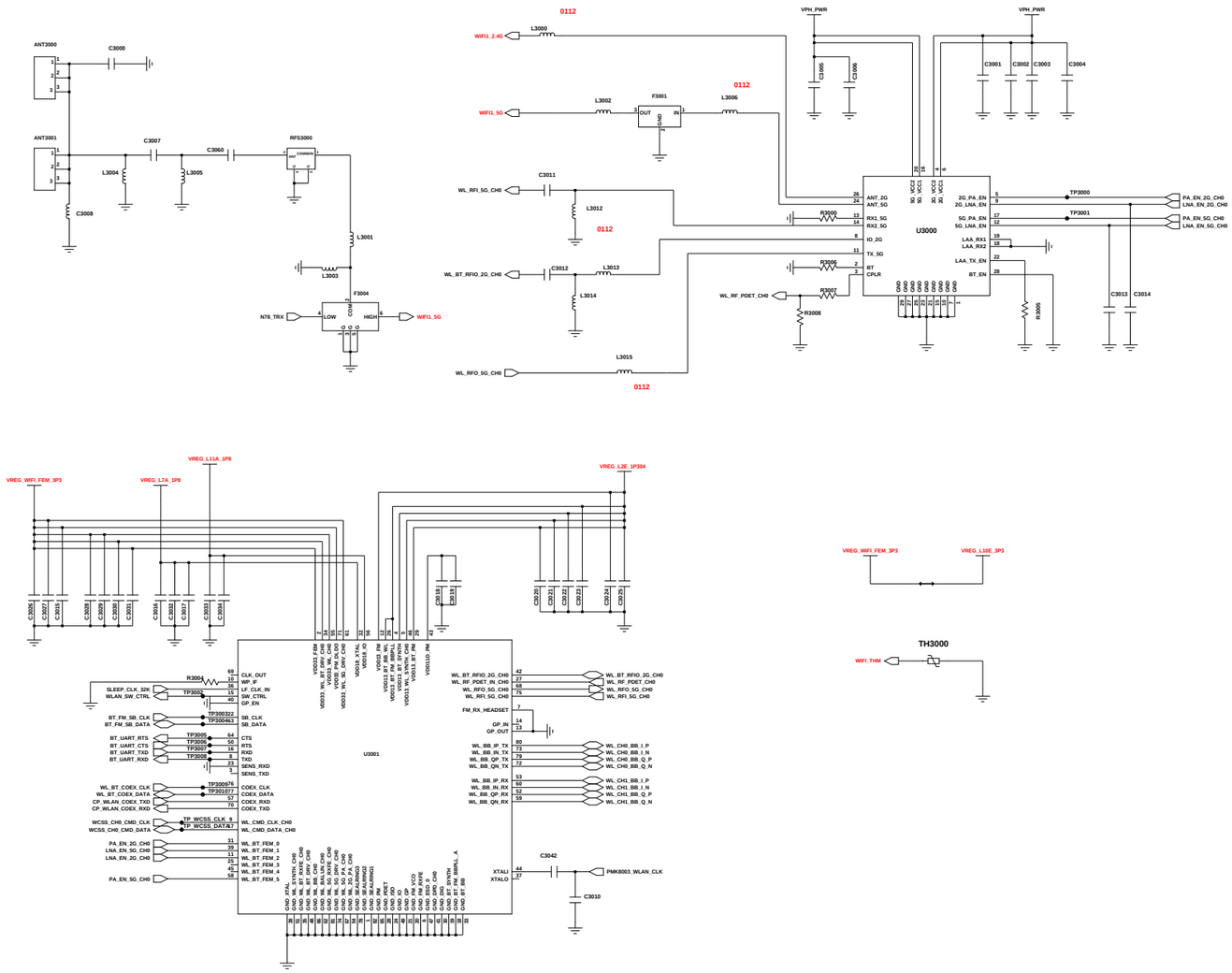

GPS L1 / GNSS/BEIDOU

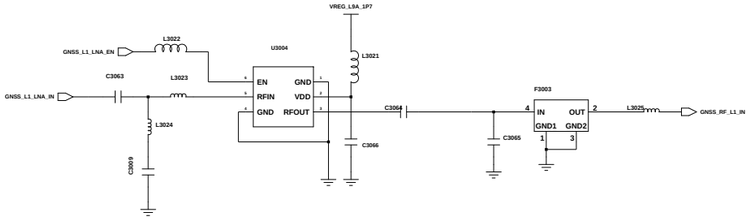

MST

does not support

GND CCP

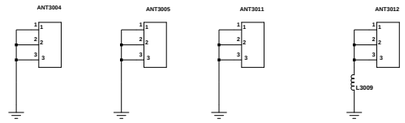

NFC

eSE : SN4V
UICC : RN4V

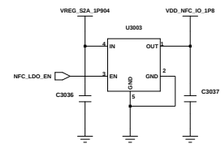

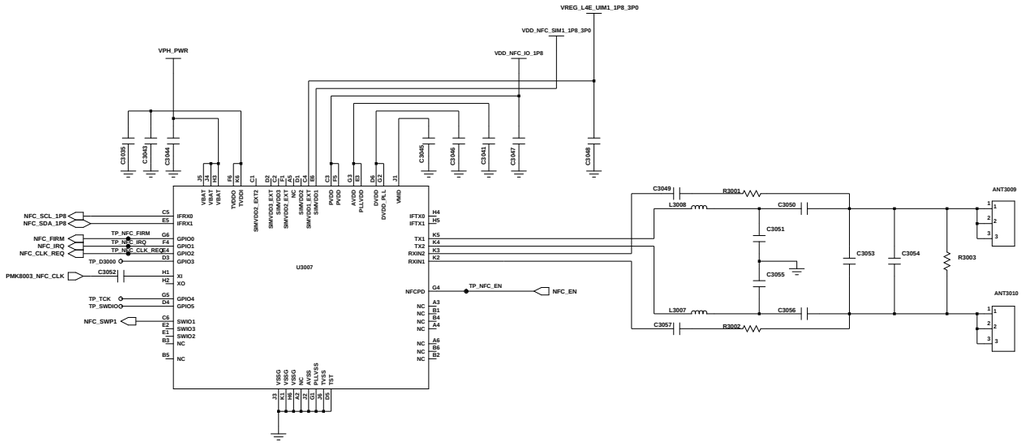

Engineer:	SM-A426B		
Drawn by:			
R&D CHK:	TITLE:	Size:	
DOC CTRL CHK:	WIFI/NFC/MST/GPS		
MFG ENGR CHK:			
QA CHK:	REV	Drawing Number:	Page: 1

Changed by: user118 | Date Changed: | Time Changed:

SAMSUNG CONFIDENTIAL
THIS DOCUMENT CONTAINS CONFIDENTIAL
PROPRIETARY INFORMATION THAT IS
SAMSUNG ELECTRONICS CO'S PROPERTY.
DO NOT DISCLOSE TO OR DUPLICATE FOR OTHERS
EXCEPT AS AUTHORIZED BY SAMSUNG.

(INTERFACE, GPIO)

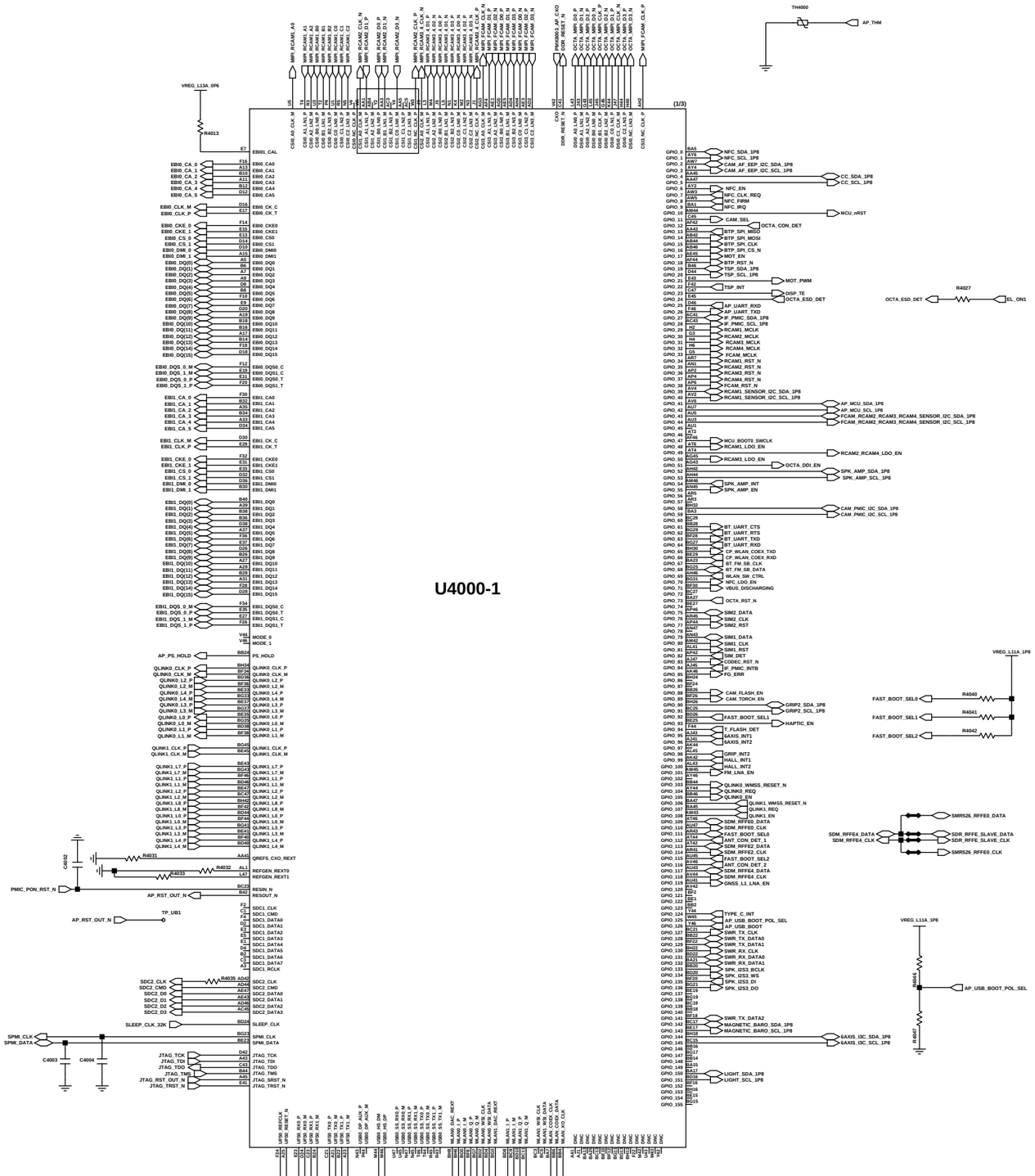

I2C PULL UP

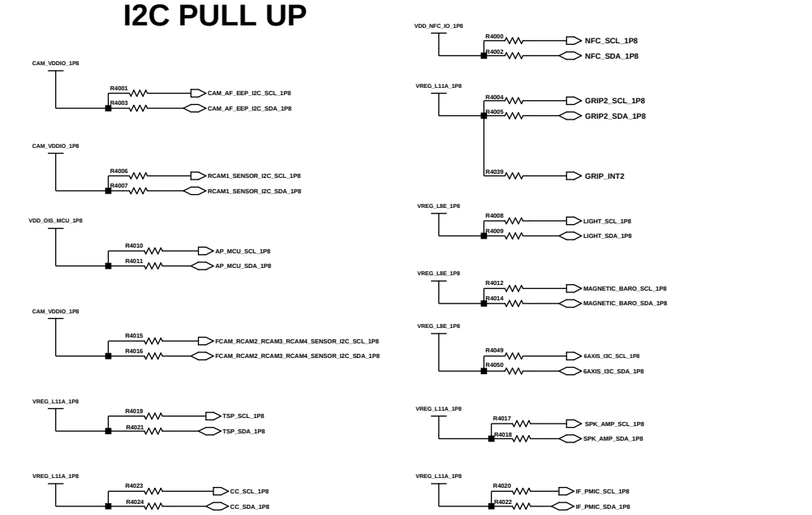

MEMORY

6GB/128GB R4025

8GB/128GB R4026

8GB/256GB R4034

U R4038

U1 R4043

W R4044

V R4045

CON4000 CON4001

2D BARCODE

SMD NC

JTAG CON

(3711-001713 / AXE612124)

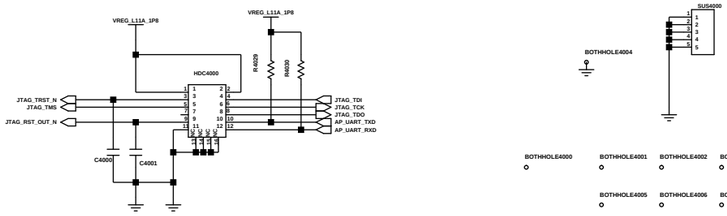

BOSS HOLE

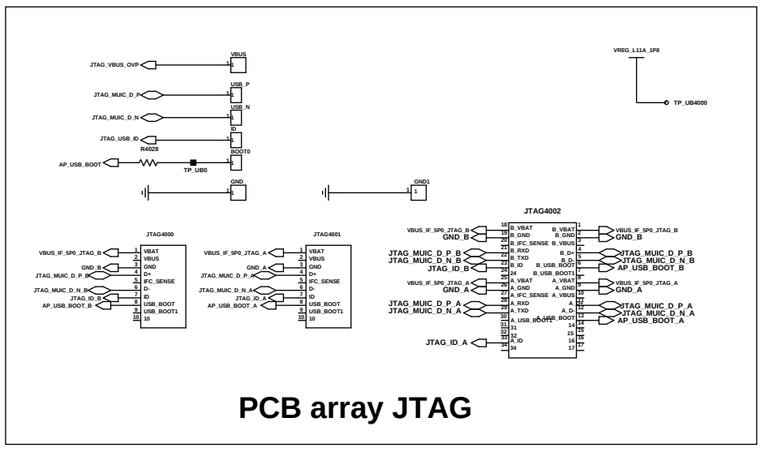

PCB array JTAG

Engineer					SM-A426B
Drawn By:					
R&D CHK:					TITLE: AP/CP
DOC CTRL CHK:					Size
MFG ENGR CHK:					
Changed by:	Date Changed:	Time Changed:	QA CHK:		Drawing Number

SAMSUNG CONFIDENTIAL
THIS DOCUMENT CONTAINS CONFIDENTIAL
PROPRIETARY INFORMATION THAT IS
SAMSUNG ELECTRONICS CO'S PROPERTY.
DO NOT DISCLOSE TO OR DUPLICATE FOR OTHERS
EXCEPT AS AUTHORIZED BY SAMSUNG.

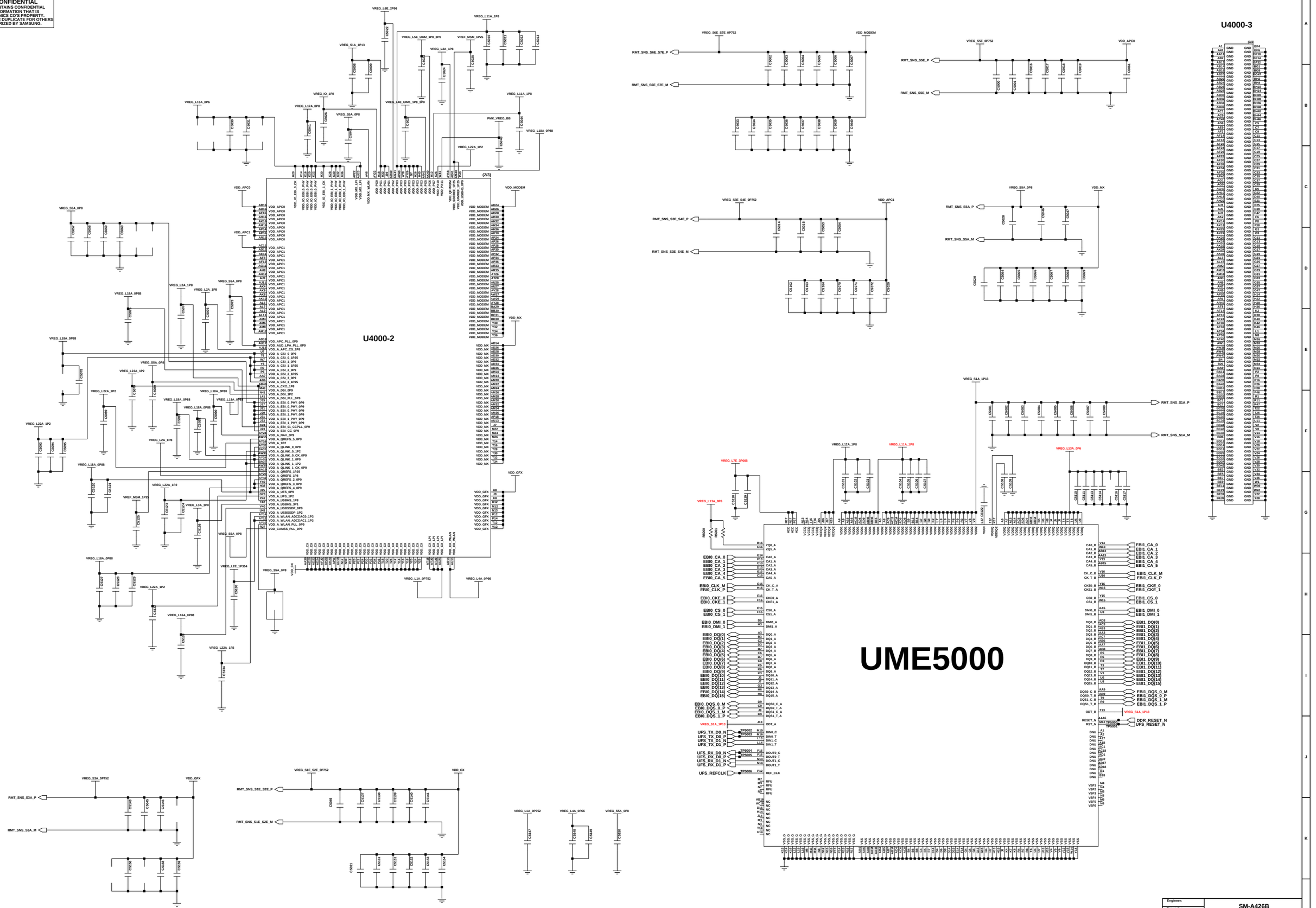

Engineer:	SM-A426B
Drawn by:	
R&D CHK:	TITLE: AP/CP/uMCP
DOC CTRL CHK:	Size:
MPG ENGR CHK:	
QA CHK:	REV / Drawing Number: / Page:

Changed by: | Date Changed: | Time Changed:

SAMSUNG CONFIDENTIAL
THIS DOCUMENT CONTAINS CONFIDENTIAL
AND PROPRIETARY INFORMATION OF
SAMSUNG ELECTRONICS CO'S PROPERTY.
DO NOT DISCLOSE TO OR DUPLICATE FOR OTHERS
EXCEPT AS AUTHORIZED BY SAMSUNG.

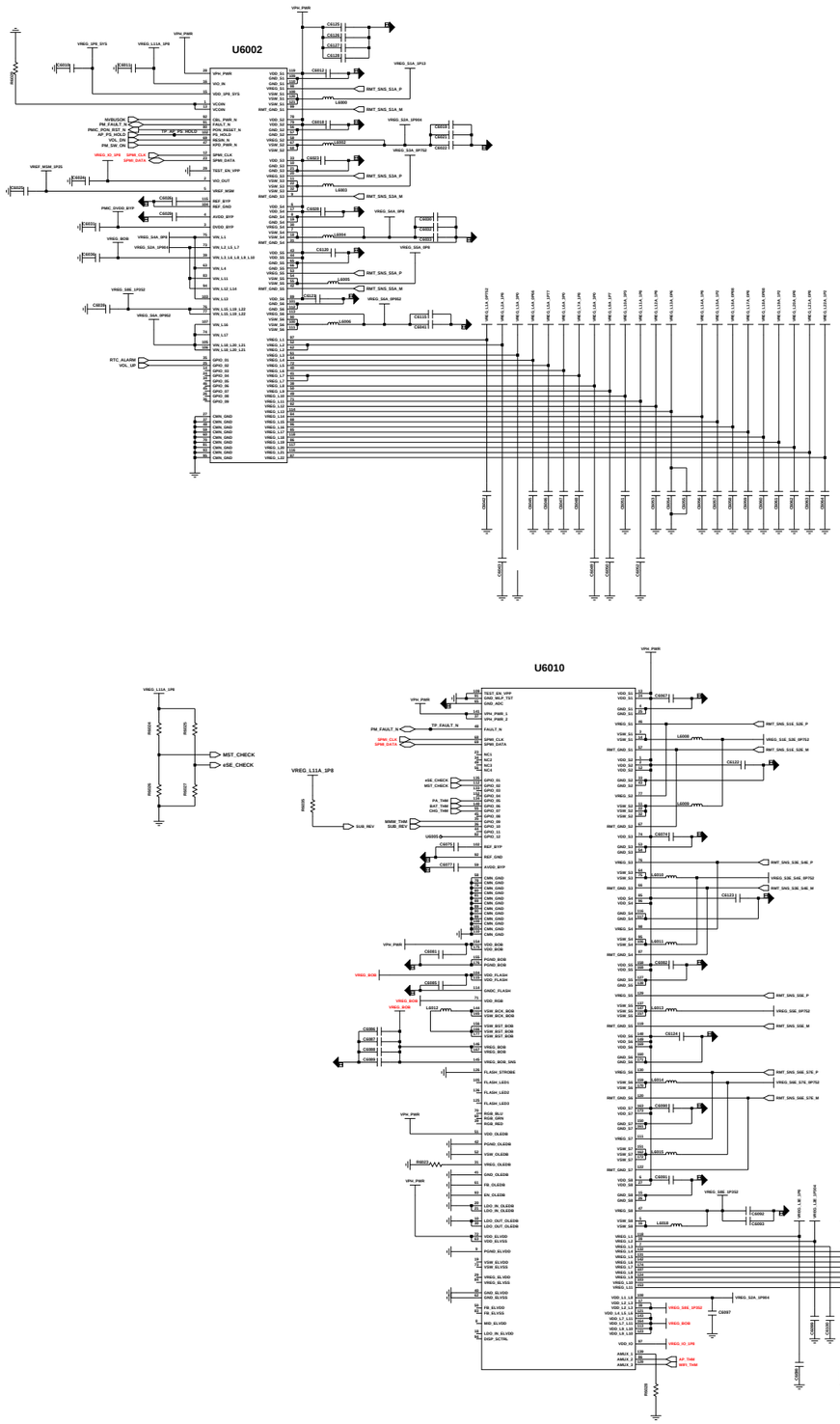

DIRECT CHARGER

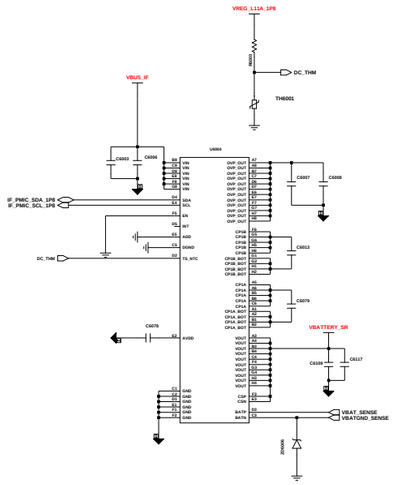

IF PMIC

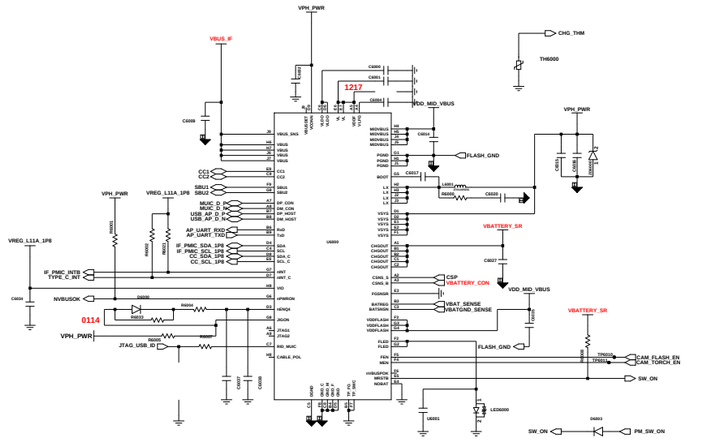

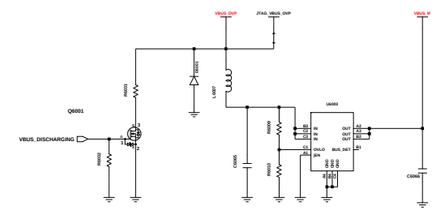

OVP

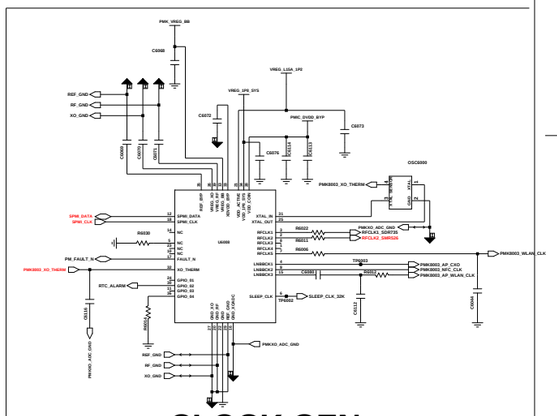

CLOCK GEN

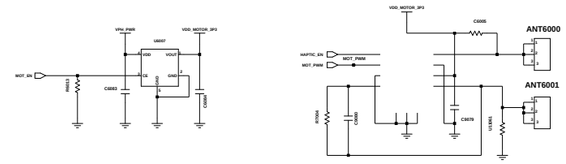

MOTOR

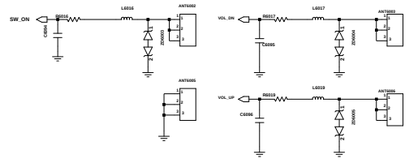

POWER & VOL KEY

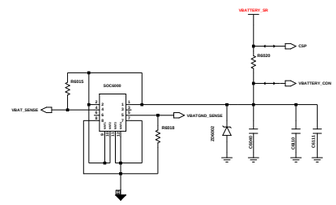

BATTERY CON

Engineer:	SM-A426B
Drawn by:	
R&D Coord.:	TITLE: POWER/MOT/KEY
DOC CTRL Coor.:	
MFG Engr Coor.:	
QA Coor.:	REV: Drawing Number:

Changed by:	Date Changed:	Time Changed:

SAMSUNG CONFIDENTIAL
THIS DOCUMENT CONTAINS CONFIDENTIAL PROPRIETARY INFORMATION THAT IS SAMSUNG ELECTRONICS CO'S PROPERTY. DO NOT DISCLOSE TO OR DUPLICATE FOR OTHERS EXCEPT AS AUTHORIZED BY SAMSUNG.

AUDIO & SENSOR PART

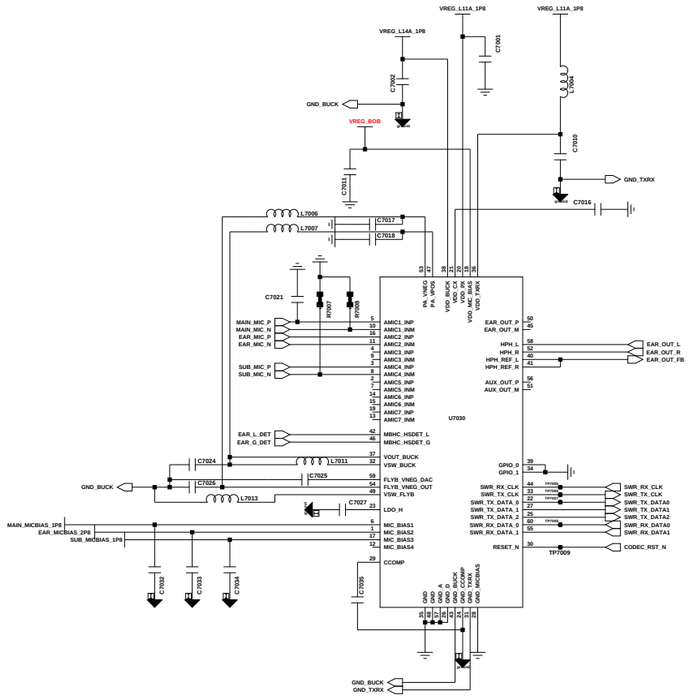

CODEC

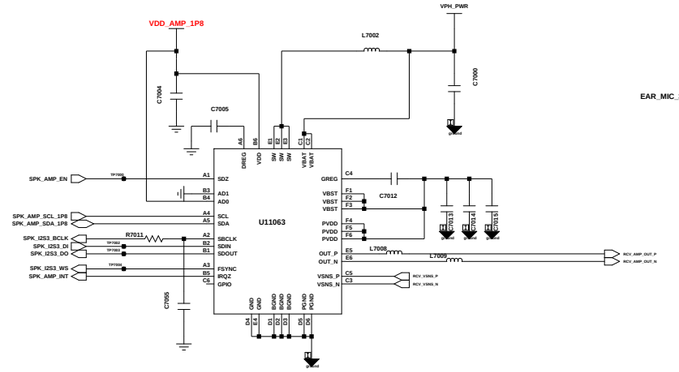

RCV AMP

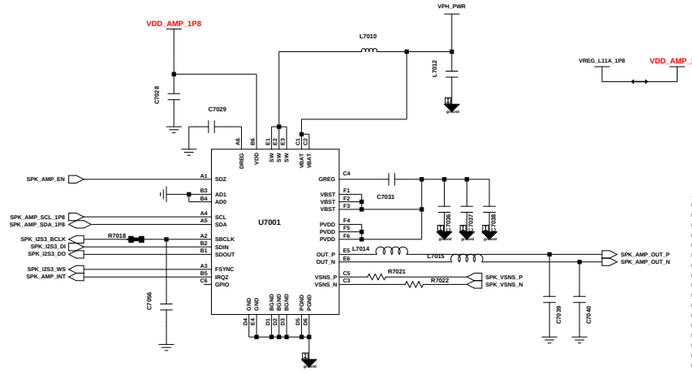

SPK AMP

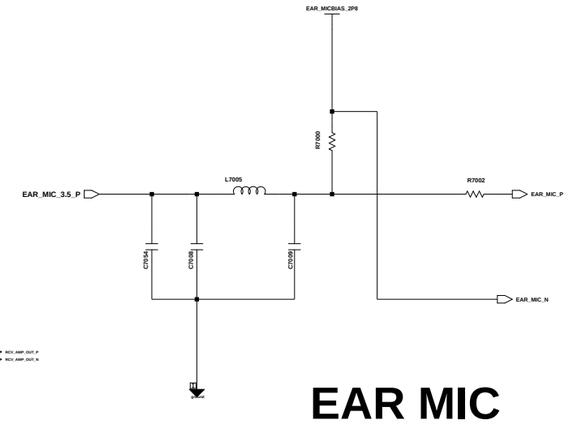

EAR MIC

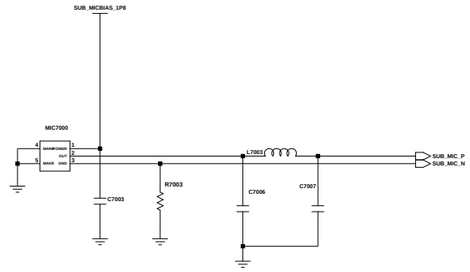

2nd MIC

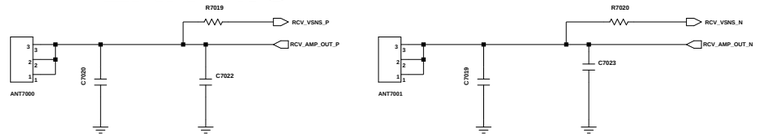

RCV CONTACT

SENSOR

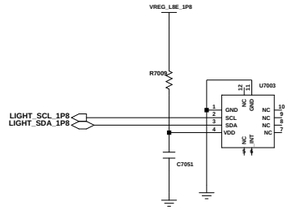

AMBIENT SENSOR

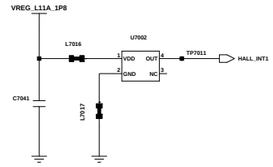

HALL IC

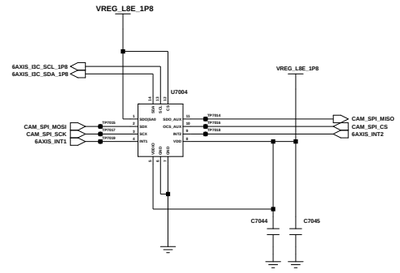

ACC&GYRO SENSOR

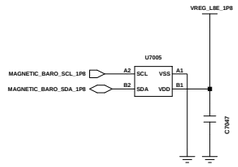

MAGNETIC SENSOR

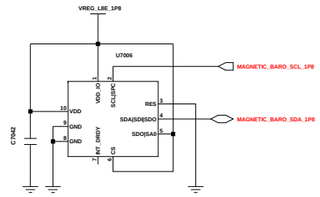

DUAL SIM / T-FLASH (3in2)

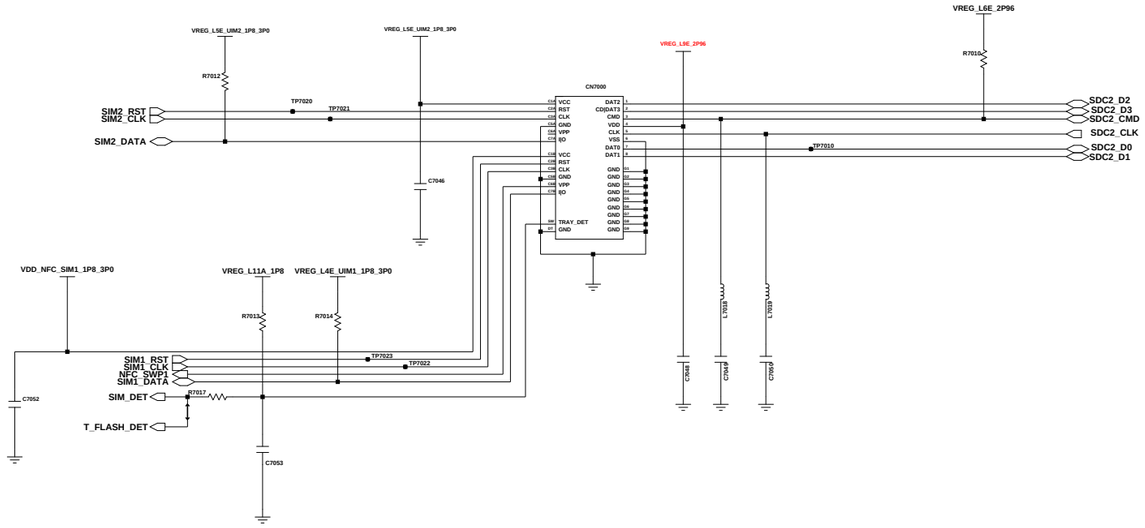

Engineer:	
Drawn by:	
R&D CHK:	TITLE: A52_LTE_REV00
DOC CTRL CHK:	Size:
MFG ENGR CHK:	

Changed by:	Date Changed:	Time Changed:	QA CHK:	REV	Drawing Number:	Page:

SAMSUNG CONFIDENTIAL
THIS DOCUMENT CONTAINS CONFIDENTIAL PROPRIETARY INFORMATION THAT IS SAMSUNG ELECTRONICS CO'S PROPERTY. DO NOT DISCLOSE TO OR DUPLICATE FOR OTHERS EXCEPT AS AUTHORIZED BY SAMSUNG.

CAMERA

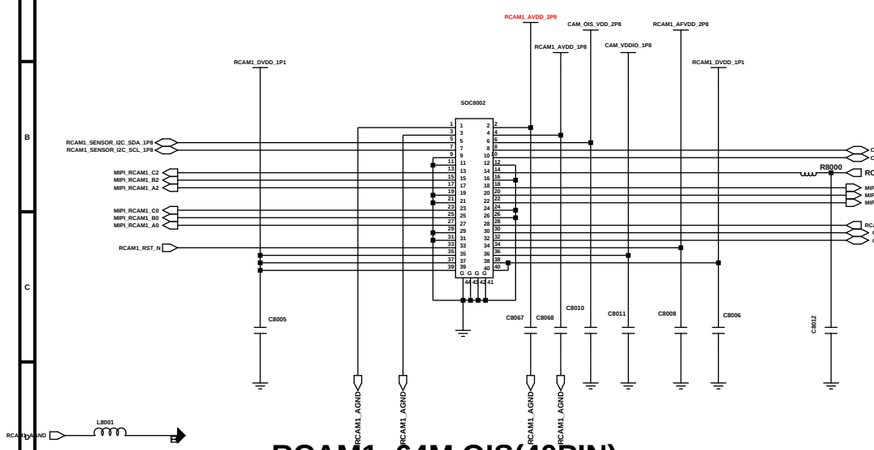

RCAM1_64M OIS(40PIN)

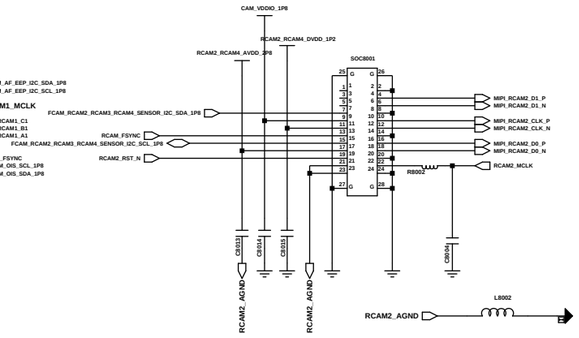

RCAM2_5M_BOKEH_CAMERA(24PIN)

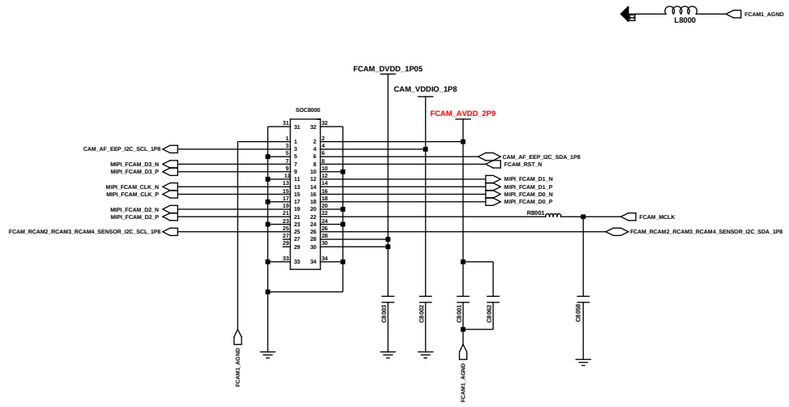

FRONT_32M CAMERA (30PIN)

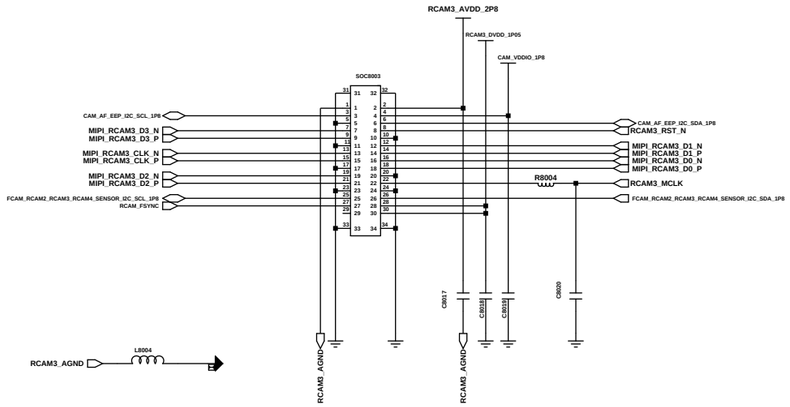

RCAM3_SUPER WIDE_8M CAMERA(30pin)

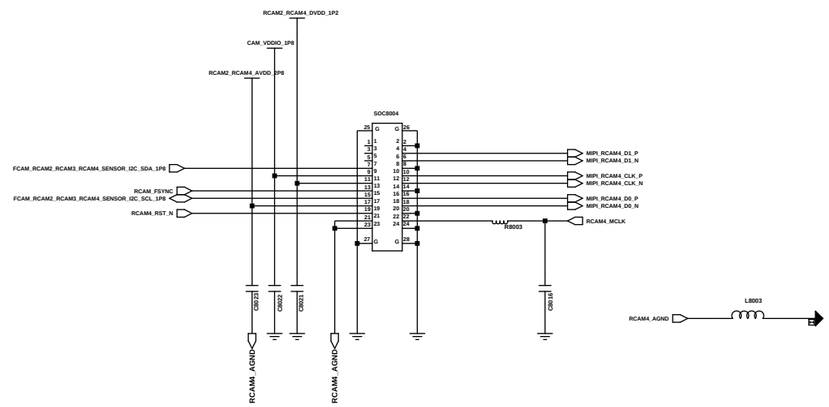

RCAM4_5M_MACRO_CAMERA(24PIN)

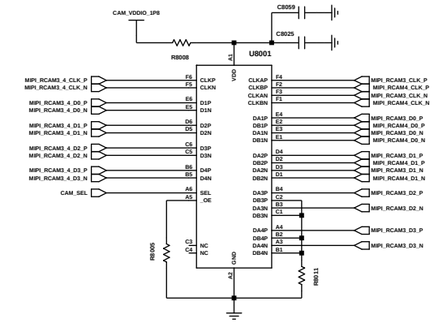

MIPI SWITCH (RCAM3,RCAM4)

CAM PMIC

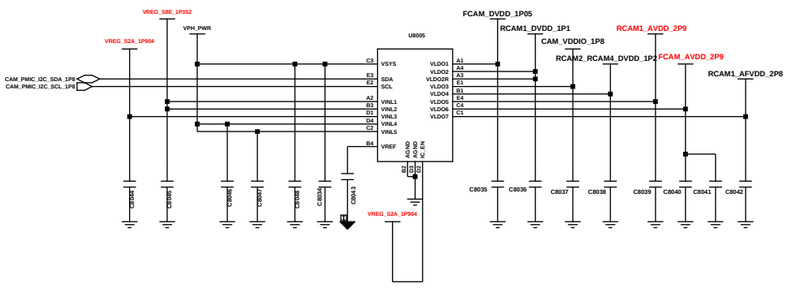

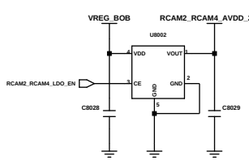

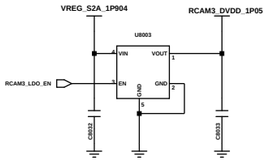

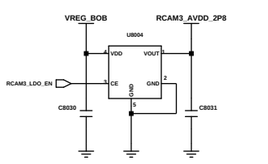

RCAM2_RCAM4_AVDD RCAM3_DVDD RCAM3_AVDD

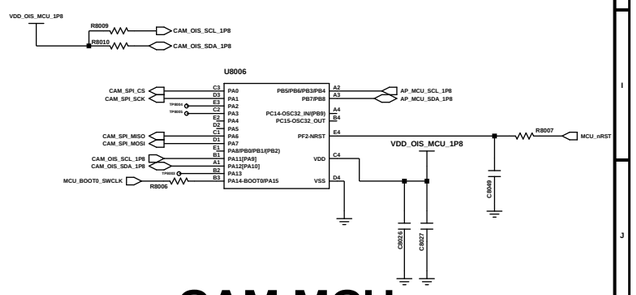

CAM MCU

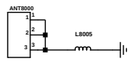

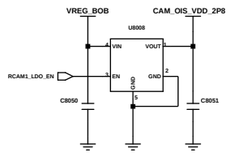

RCAM1_OIS

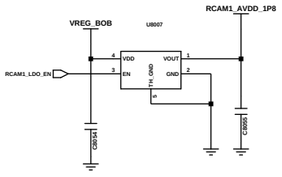

RCAM1_AVDD

@REV01

RCAM4_AVDD RCAM4_DVDD

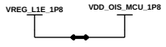

CAM MCU_DVDD

Engineer:	SM-A426B		
Drawn by:			
R&D CHK:	TITLE: CAMERA		Size:
DOC CTRL CHK:			
MFG ENGR CHK:			
QA CHK:	REV	Drawing Number:	Page: 78

Changed by: | Date Changed: | Time Changed:

SAMSUNG CONFIDENTIAL
THIS DOCUMENT CONTAINS CONFIDENTIAL PROPRIETARY INFORMATION THAT IS SAMSUNG ELECTRONICS CO'S PROPERTY. DO NOT DISCLOSE TO OR DUPLICATE FOR OTHERS EXCEPT AS AUTHORIZED BY SAMSUNG.

C2C (Conn to Conn FPCB)

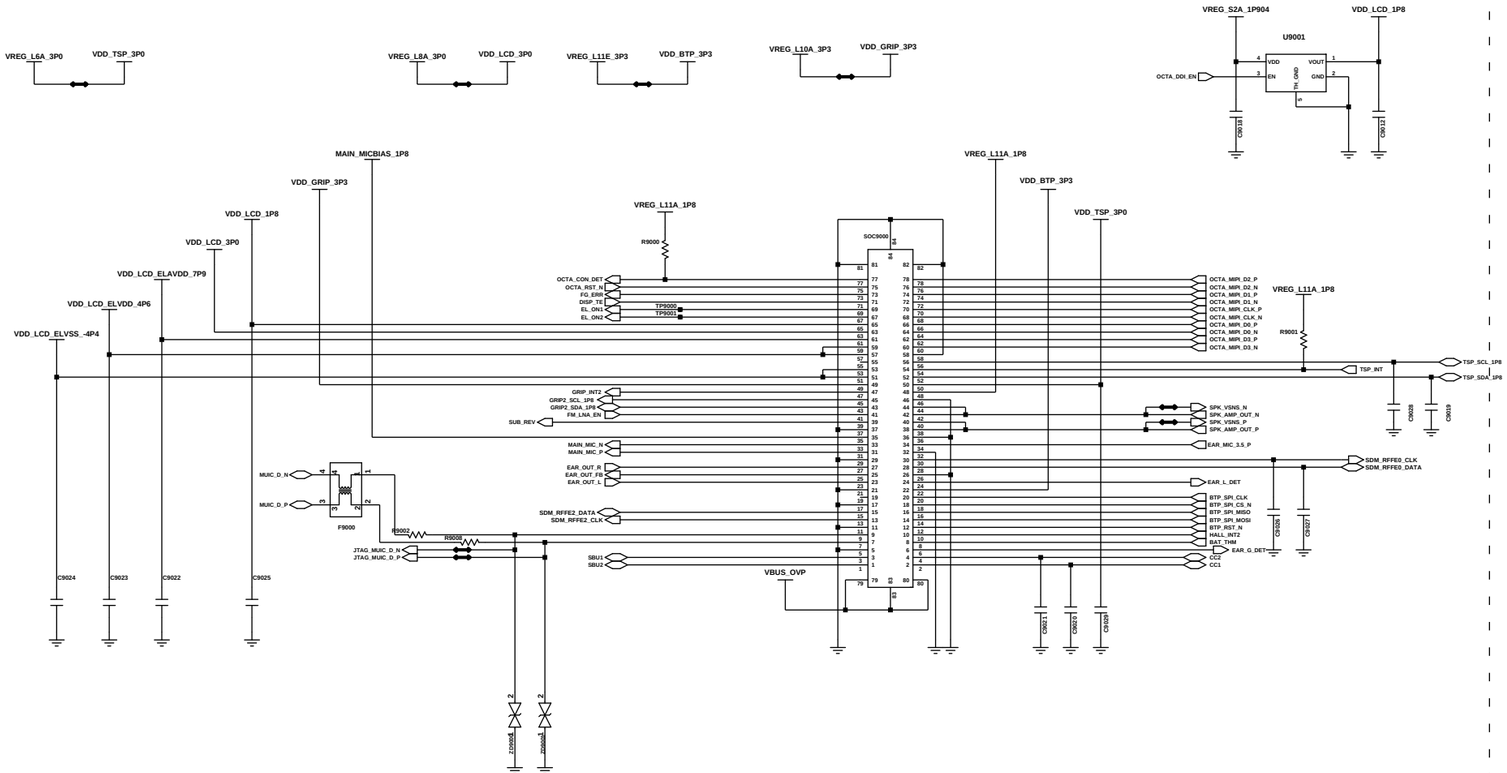

DISPLAY

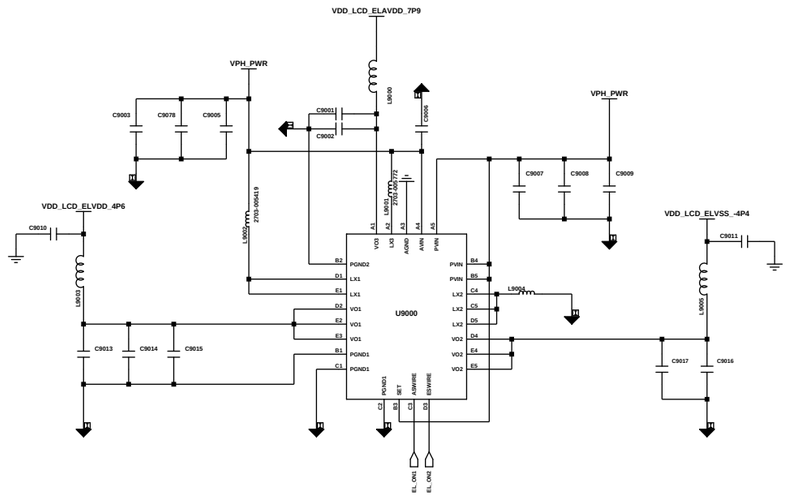

DISPLAY PMIC

SHIELD CAN/BOTH HOLE

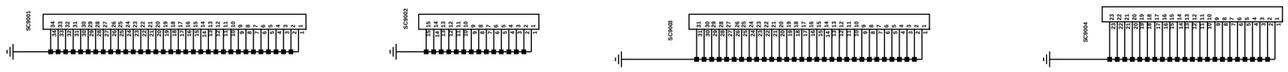

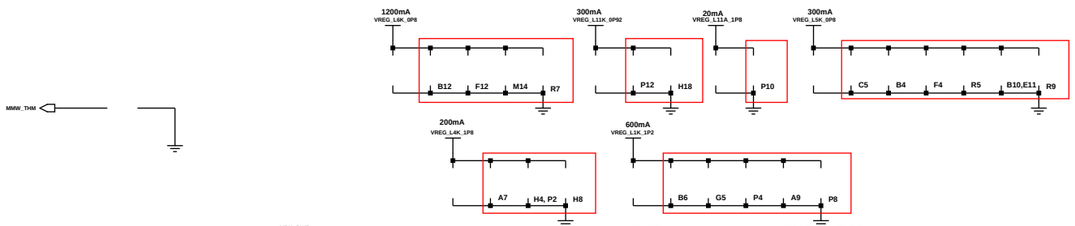

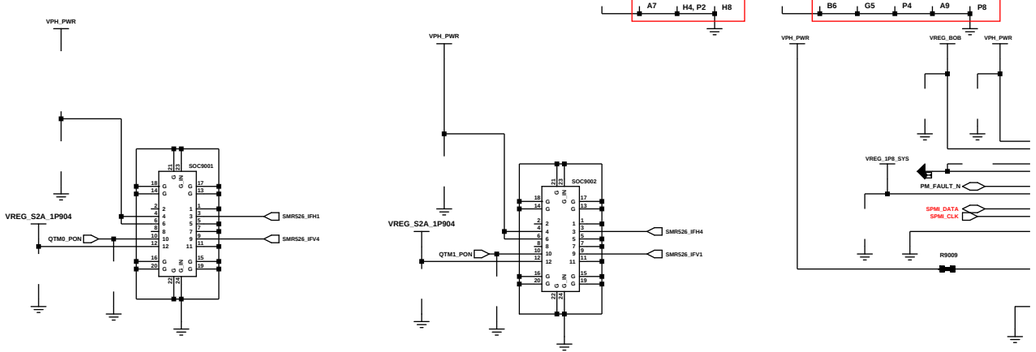

mmW_ANT_CONN (Left)

mmW_ANT_CONN (Right)

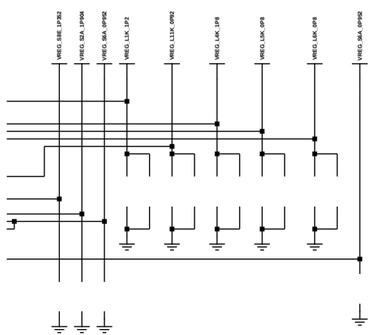

MMW PMIC

5G IFIC

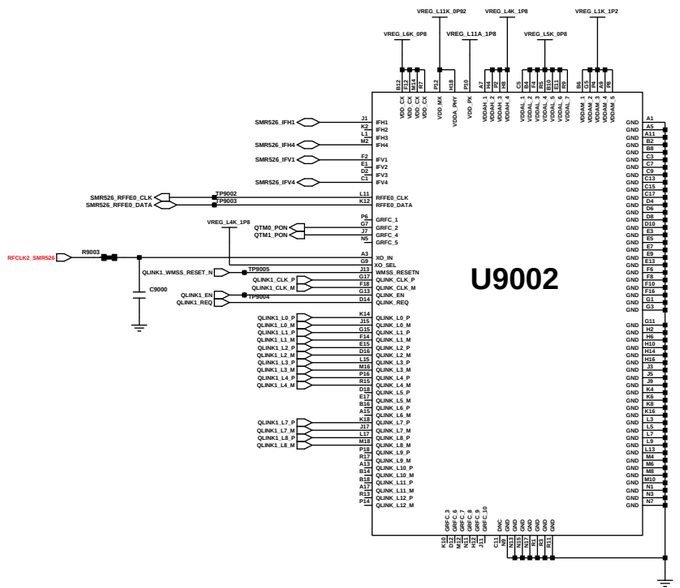

Engineer:		SAMSUNG ELECTRONICS	
Drawn by:			
R&D CHK:		TITLE: SM-A716U	Size:
DOC CTRL CHK:			
MFG ENGR CHK:			
QA CHK:		REV	Drawing Number:

Changed by: uss20 | Date Changed: Thursday, June 18, 2015 | Time Changed: 10:18:28 am | Page: 1

SAMSUNG CONFIDENTIAL
THIS DOCUMENT CONTAINS CONFIDENTIAL
AND PROPRIETARY INFORMATION OF
SAMSUNG ELECTRONICS CO'S PROPERTY.
DO NOT DISCLOSE TO OR DUPLICATE FOR OTHERS
EXCEPT AS AUTHORIZED BY SAMSUNG.

A52_NA_SUB_REV0.0A

BAT_THM

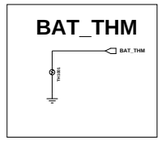

IF CON (TYPE-C)

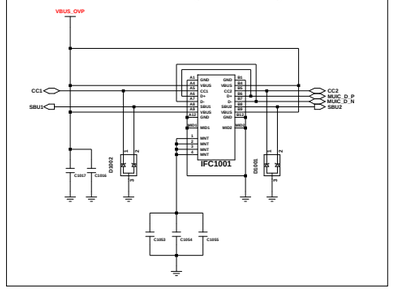

SPK

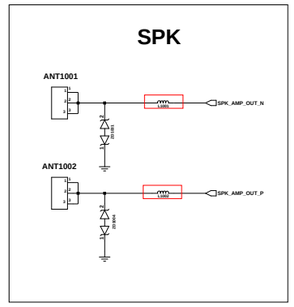

BTP CON

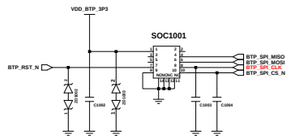

MAIN ANTENNA (LB) MAIN1

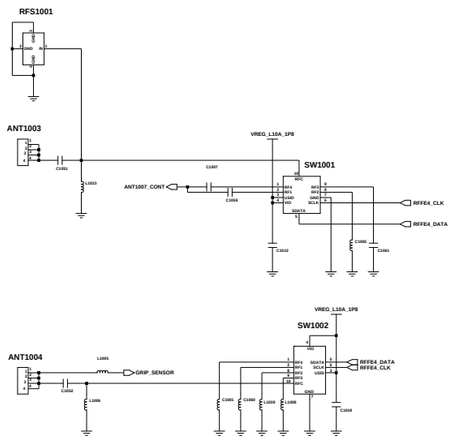

MIC

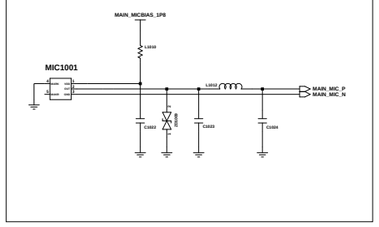

HALL_IC

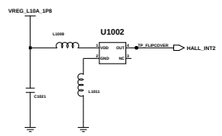

GRIP SENSOR

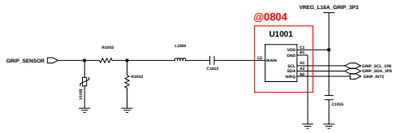

MAIN ANTENNA (MB, HB) MAIN2

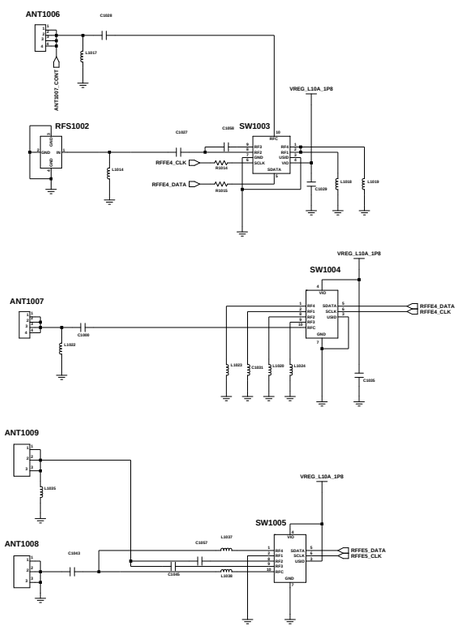

CON / ANT / TP / BH

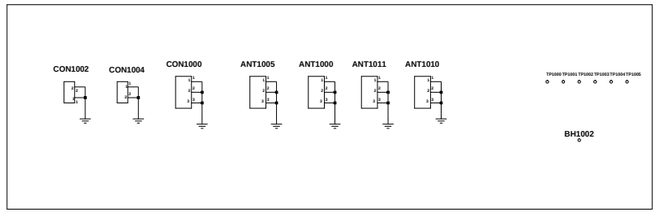

EAR JACK

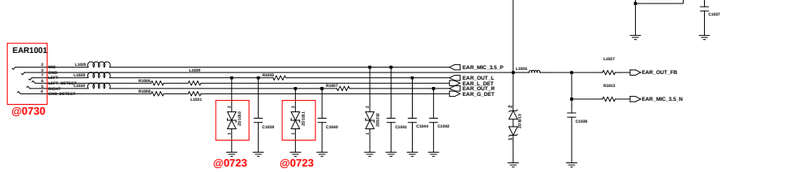

FM_LNA

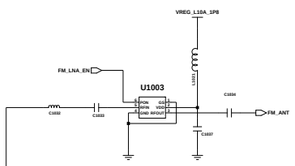

MAIN FPCB

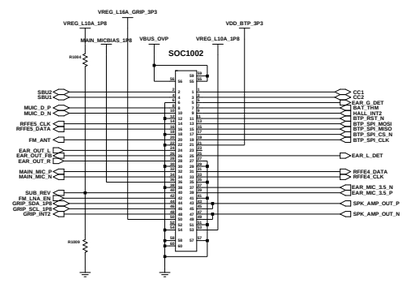

ID	R_VALUE	Model
1	30K	EUR
5	332K	CHN,USA

B : EUR
N : KOR
0 : CHN,USA

R1010
R1011
NC

Engineer:	
Drawn by:	
R&D CHK:	TITLE:
DOC CTRL CHK:	
MFG SNGR CHK:	

Changed by:	Date Changed:	Time Changed:	QA CHK:	REV:	Drawing Number:	Page:

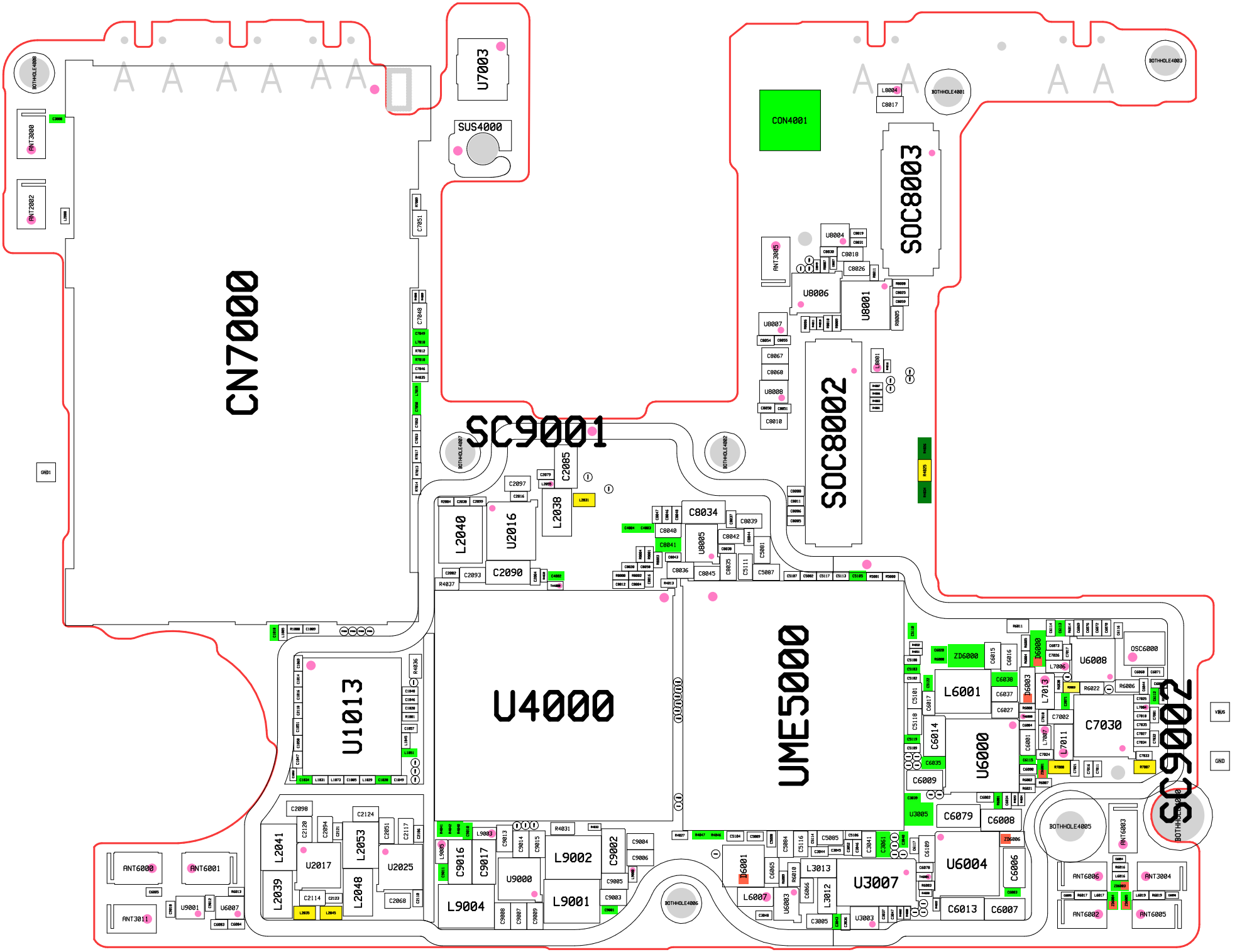
CN7000
U7003
SUS4000
CON4001
SOC8003
SOC8002
SC9001
SC9002
U4000
UME5000
U1013
U2016
L2040
L2038
C2085
C2090
U8005
U8006
U8001
U8004
U8007
U8008
U6000
U6004
U6008
L6001
C7030
U3007
L9001
L9002
L9004
U9000
U2017
U2025
L2041
L2039
L2053
L2048
ANT6000
ANT6001
ANT3011
ANT3000
ANT2002
ANT3005
ANT6003
ANT6006
ANT3004
ANT6002
ANT6005
BOTHHOLE4008
BOTHHOLE4003
BOTHHOLE4001
BOTHHOLE4007
BOTHHOLE4002
BOTHHOLE4006
BOTHHOLE4005
GND1
VBUS
GND

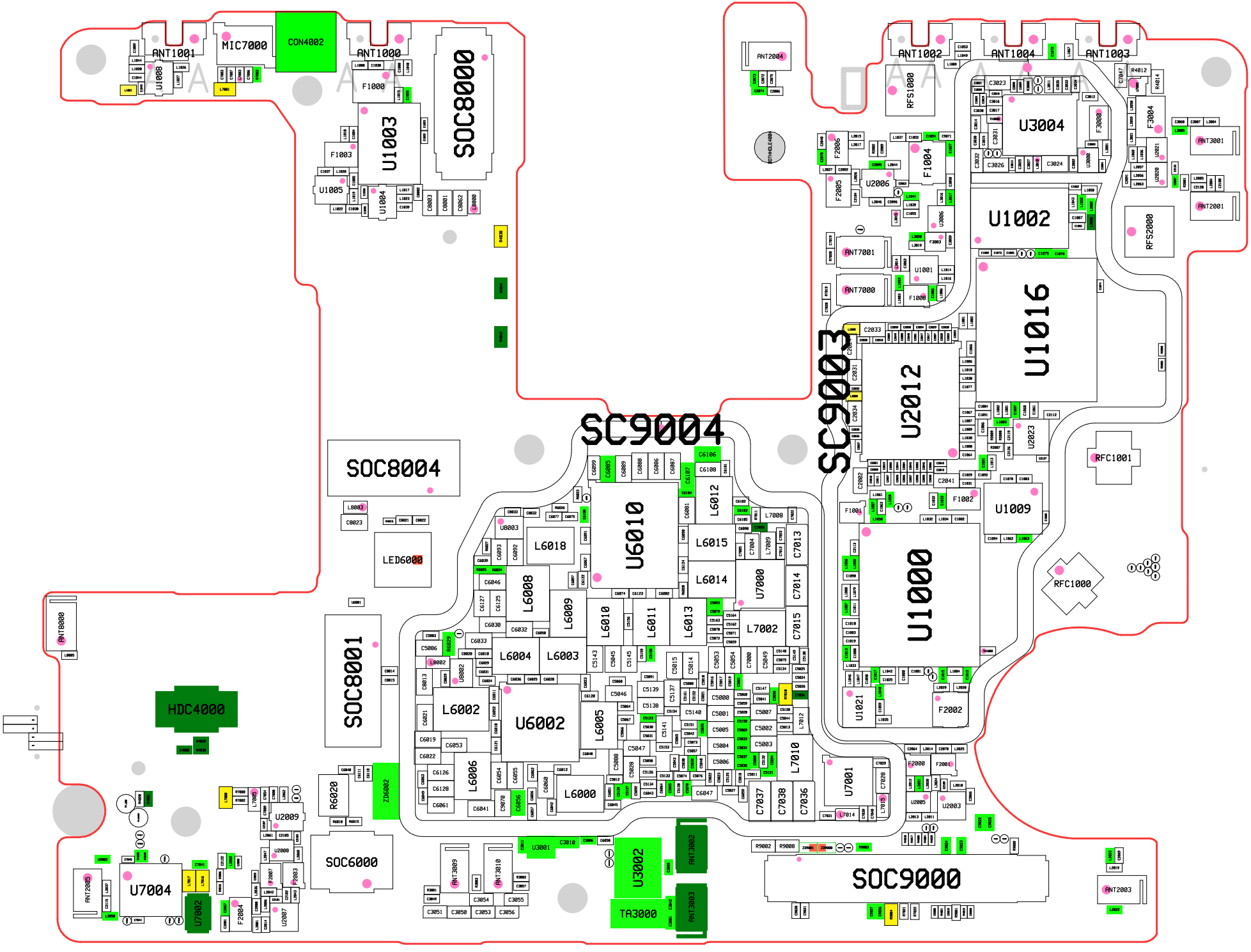
ANT1001
MIC7000
CON4002
ANT1000
SOC8000
U1003
U1004
U1005
F1000
F1003
ANT2004
ANT1002
ANT1004
ANT1003
RFS1000
U3004
F3000
F3004
ANT3001
ANT2001
RFS2000
U1002
U1016
U2012
SC9003
SC9004
SOC8004
LED6000
U6010
U6002
U1000
U1009
RFC1001
RFC1000
SOC8001
HDC4000
ANT8000
U7004
U7002
SOC6000
ZD6002
R6020
U3002
TA3000
ANT3002
ANT3003
ANT3009
ANT3010
SOC9000
ANT2003
U7001
U2003
U2009
U2007
ANT2005